Sequential Logic Circuits

Md. Islahur Rahman Ebon
Lecturer, EEE, NBIU
Mob: 01721000469
Email: irebon.rus121@gmail.com

Sequential Circuit

- A sequential circuit is a type of digital circuit where the output depends on both the current inputs and the previous state of the circuit.

- Unlike combinational circuits, which only consider the current inputs, sequential circuits incorporate memory elements (like latches and flip-flops) to store and use past states.

- This allows them to process information in a sequence and maintain state between clock pulses.

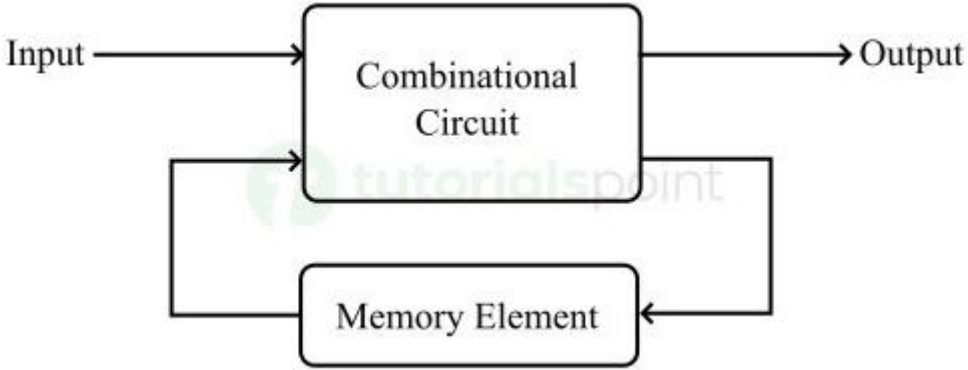

Main Components of Sequential Circuit

- A sequential circuit consists of several different digital components to process and hold information in the system. Here are some key components of a sequential circuit explained −

- Logic Gates: The logic gates like AND, OR, NOT, etc. are used to implement the data processing mechanism of the sequential circuits. These logic gates are basically interconnected in a specific manner to implement combinational circuits to perform logical operations on input data.

- Memory Element: In sequential circuits, the memory element is another crucial component that holds history of circuit operation. Generally, flip-flops are used as the memory element in sequential circuits.
- In sequential circuits, a feedback path is provided between the output and the input that transfers information from output end to the memory element and from memory element to the input end.

All these components are interconnected together to design a sequential circuit that can perform complex operations and store state information in the memory element.

What is Flip-Flop?

- Flip-flop is a basic digital memory circuit, which stores one bit of information. Flip flops are the fundamental blocks of most sequential circuits.
- It is also known as a bistable multivibrator or a binary or one-bit memory.
- Flip-flops are used as memory elements in sequential circuits.
- The output is obtained in a sequential circuit from the Flip-flops combinational circuit or flip-flop or both.
- The state of flip-flops changes at the active state of clock pulses and remains unaffected when the clock pulse is not active.
- In particular, clocked flip flops serve as memory elements in synchronous sequential Circuits and unclocked flip-flops (i.e., latches) serve as memory elements in asynchronous sequential circuits.

What is Latch ?

- Latch is an electronic device, which changes its output immediately based on the applied input.
- It is used to store either 1 or 0 at any specified time.
- It consists of two inputs namely "SET" and RESET and two outputs, which are complement to each other.

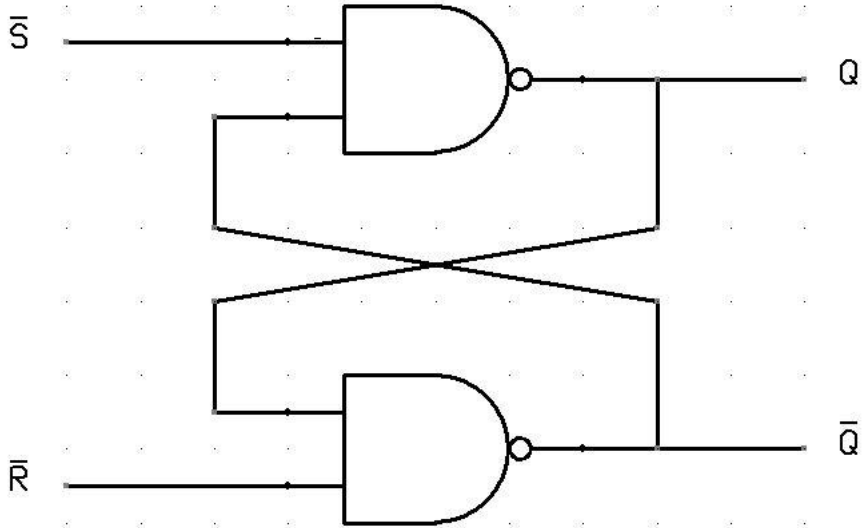

Latch

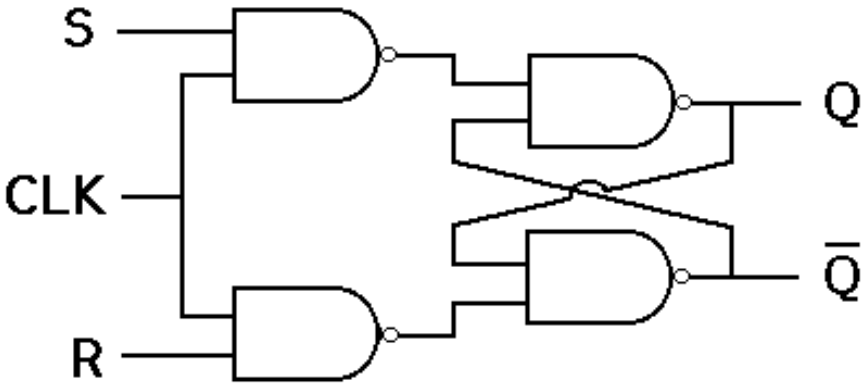

Flip-Flop

Flip-Flop	Latch
Flip-flop is a bistable device i.e., it has two stable states that are represented as 0 and 1.	Latch is also a bistable device whose states are also represented as 0 and 1.
It checks the inputs but changes the output only at times defined by the clock signal or any other control signal.	It checks the inputs continuously and responds to the changes in inputs immediately.
It is a edge triggered device.	It is a level triggered device.
Gates like NOR, NOT, AND, NAND are building blocks of flip flops.	These are also made up of gates.
They are classified into asynchronous or synchronous flipflops.	There is no such classification in latches
It forms the building blocks of many sequential circuits like counters.	These can be used for the designing of sequential circuits but are not generally preferred.
Flip-flop always have a clock signal	Latches doesn't have a clock signal
Flip-flop can be build from Latches	Latches can be build from gates
ex:D Flip-flop, JK Flip-flop	ex:SR Latch, D Latch

Types of Flip-Flop

- S-R Flip Flop
- J-K Flip Flop
- D Flip Flop
- T Flip Flop

What is D Flip Flop?

The D flip-flop is a clocked flip-flop with a single digital input 'D'. Each time a D flip-flop is clocked, its output follows the state of 'D'. The D Flip Flop has only two inputs D and CP. The D inputs go precisely to the S input and its complement is used to the R input.

Considering the pulse input is at 0, the outputs of gates 3 and 4 are at the 1 level and the circuit cannot convert state regardless of the value of D. The D input is sampled when CP = 1. If D is 1, the Q output goes to 1, locating the circuit in the set state. If D is 0, output Q goes to 0, and the circuit switches to a clear state.

D Flip Flop Working

- Let us look at the possible cases and write it down in our truth table. The clock is always 1, so only two cases are possible where D can be high or low.

Case 1: D = 0

Gate 1 = 1, Gate 2 = 0, Gate 4 / Q(n+1)' = 1, Gate 3 / Q(n+1) = 0

Note: Since one input of Gate4 is 0 and Gate4 is a NAND gate. Irrespective of the other input, the output of Gate 4 will be 1 as per the property of NAND gates.

Case 2: D = 1

Gate 1 = 0, Gate 2 = 1, Gate 3 / Q(n+1) = 1, Gate 4 / Q(n+1)' = 0

Note: Since one input of Gate3 is 0 and Gate3 is a NAND gate. Irrespective of the other input, the output of Gate 3 will be 1 as per the property of NAND gates.

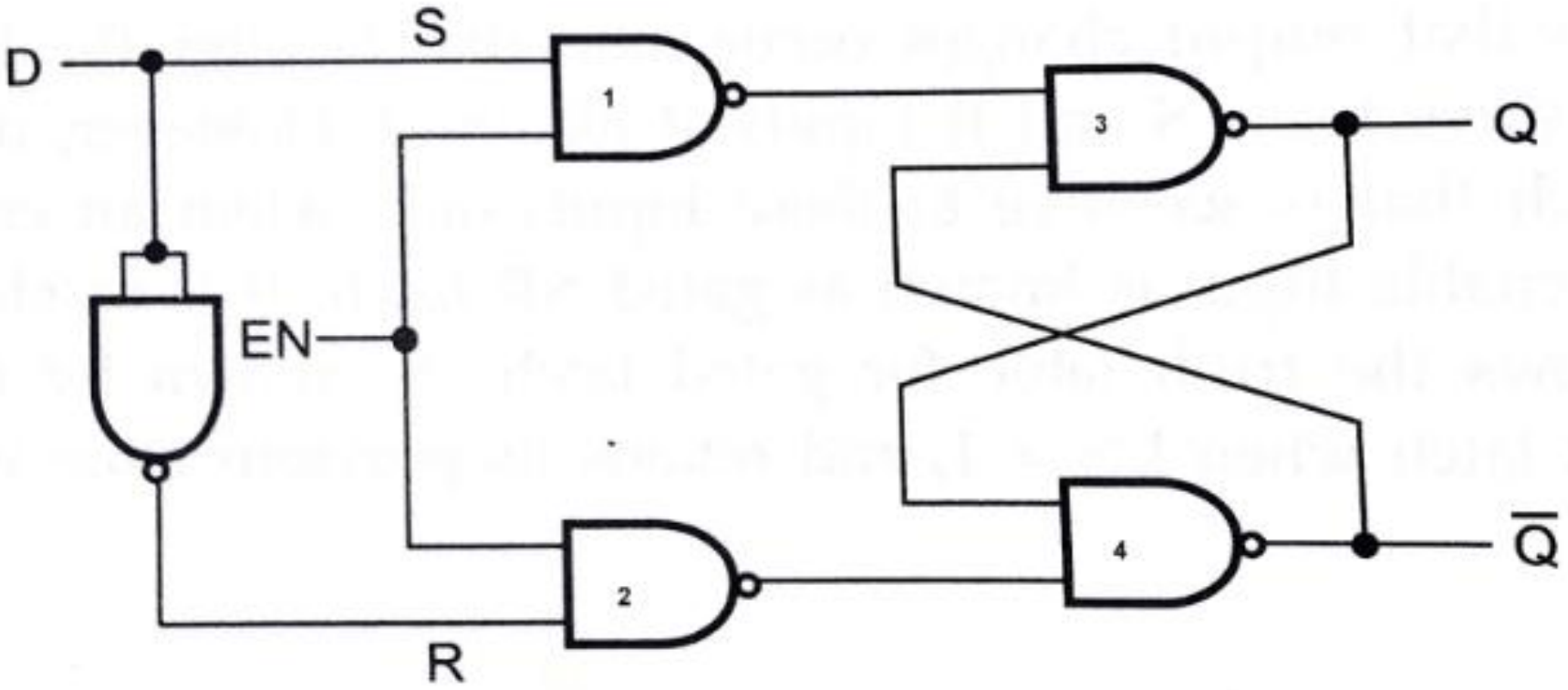
D
S
1
3
Q
EN
4
$\overline{Q}$
2
R

D Flip-Flop Truth Table

CLK	D	Q(n+1)	State
–	0	0	RESET
–	1	1	SET

Characteristic Table

D	Qn	Q(n+1)
0	0	0
0	1	0
1	0	1
1	1	1

D Flip Flop Advantages

There are several advantages to using a D flip-flop. Some of them are listed below:

- **Single input:** The D flip-flop has a single data input, which makes it simpler to use and easier to interface with other digital circuits.
- **No feedback loop:** The D flip-flop does not have a feedback loop, which eliminates the possibility of a race condition and makes it more stable than other types of flip-flops.
- **No invalid states:** It does not have any weak states, which helps to avoid unpredictable behavior in digital systems.
- **Reduced power consumption:** The D flip-flop consumes less power than other types of flip-flops, making it more energy efficient.
- **Bi-stable operation:** Like other flip-flops, the D flip-flop has a bi-stable operation, which means that it can hold a state indefinitely until it is changed by an input signal.

Limitations of D Flip Flop

Apart from several advantages, there are some limitations associated with D flip-flops. Some of them are listed below:

- **No feedback:** The D flip-flop does not have a feedback path, which means that it cannot be used for applications that require feedback control, such as servo systems or motor control.
- **No toggling:** It cannot be used for toggling applications since it only responds to the data input and not to the clock signal.
- **Propagation delay:** It has a propagation delay, which can lead to timing issues in digital systems with tight timing constraints.
- **Limited scalability:** The D flip-flop can be challenging to scale up to more complex digital systems, as it can lead to increased complexity and the potential for errors.

D Flip-Flop Applications

Some of the applications of D flip flop in real-world includes:

- **Shift registers:** D flip-flops can be cascaded together to create shift registers, which are used to store and shift data in digital systems. Shift registers are commonly used in serial communication protocols such as UART, SPI, and I2C.
- **State machines:** It can be used to implement state machines, which are used in digital systems to control sequences of events. State machines are commonly used in control systems, automotive applications, and industrial automation.
- **Counters:** It can be used in conjunction with other digital logic gates to create binary counters that can count up or down depending on the design. This makes them useful in real-time applications such as timers and clocks.
- **Data storage:** D flip-flops can be used to store temporary data in digital systems. They are often used in conjunction with other memory elements to create more complex storage systems.

SR Flip-Flops

- This is the most common flip-flop in electronics. This simple flip-flop circuit has a set input (S) and a reset input (R).
- Apart from this, you can see the clock at the input end.
- At the output end, you will find two complementary outputs.
- The output is also feedback to the input visible in its circuit. Hence Q and Q’ are not the actual outputs.

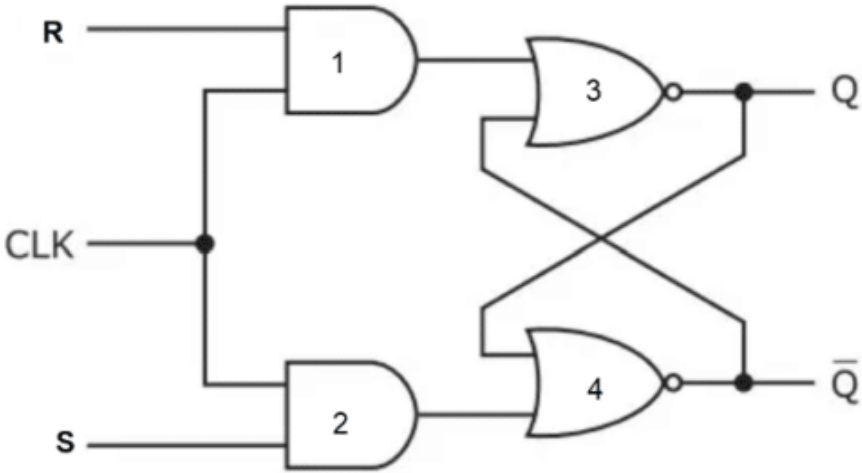

SR Flip Flop Working

Case 1: S=0, R=0

Gate1 = 0, Gate2 = 0, Gate3/Q(n+1) = Q, Gate4/Q(n+1)' = Q'

Note: Since one input of both gate3 and gate4 is 0 and both the gates are NOR gates the output of both the gates will complement the second input as per the property of NOR gates.

Case 2: S=0, R=1

Gate1 = 1, Gate2 = 0, Gate3/Q(n+1) = 0, Gate4/Q(n+1)' = 1

Note: Since one input of gate3 is 1 and gate3 is a NOR gate, output gate3 will be 0 irrespective of other input as per the property of NOR gate.

Case 3: S=1, R=0

Gate1 = 0, Gate2 = 1, Gate4/Q(n+1)' = 0, Gate3/Q(n+1) = 1

Note: Since one input of gate4 is 1 and gate4 is a NOR gate, output gate4 will be 0 irrespective of other input as per the property of NOR gate.

Case 4: S=1, R=1

Gate1 = 1, Gate2 = 1, Gate4/Q(n+1)' = 0, Gate3/Q(n+1) = 0

Note:

- Since one input of gate3 and gate4 is 1 and both the gates are NOR gates, output gate3, and gate4 will be 0 irrespective of other input as per the property of NOR gate.
- Q(n+1) and Q(n+1)' are complementary outputs hence can't be the same
- State invalid

SR Flip-Flop Truth Table

S	R	Q(n+1)	State
0	0	Qn	No change
0	1	0	RESET
1	0	1	SET
1	1	x	INVALID

Characteristic Table

S	R	Qn	Q(n+1)
0	0	0	0
0	0	1	1
0	1	0	0
0	1	1	0
1	0	0	1
1	0	1	1
1	1	0	X
1	1	1	X

SR Flip-Flop Advantages

There are several advantages to using an SR flip-flop. Some of them are listed below:

- **Simplicity:** The SR flip-flop is a simple and easy-to-understand circuit.
- **Speed:** The SR flip-flop is relatively fast, which makes it suitable for use in high-speed digital systems.
- **Low power consumption:** The SR flip-flop consumes very little power, which makes it suitable for use in battery-powered devices.
- **Bi-stable operation:** The SR flip-flop can be set and reset, making it a bi-stable circuit that can hold a state indefinitely until it is changed by an input signal.

Limitations of SR Flip Flop

Apart from several advantages, there are some limitations associated with SR flip-flops. Some of them are listed below:

- **Race condition:** The SR flip-flop is susceptible to race conditions, which occur when the output state changes unpredictably due to variations in the timing of input signals.
- **Invalid states:** If both the set and reset inputs are activated at the same time, the SR flip-flop can enter an invalid state where both outputs are high, or both are low. This can lead to unpredictable behaviour in digital systems.
- **Limited scalability:** The SR flip-flop can be difficult to scale up to more complex digital systems, as it can lead to increased complexity and the potential for errors.

SR Flip-Flop Applications

Some of the applications of SR flip-flop in real-world includes:

- **Control systems:** The SR flip-flop is used in control systems to synchronize signals and coordinate the operation of other components in the system. For example, in a traffic light control system.
- **Memory storage:** The SR flip-flop is used in memory storage devices such as registers, which are used to store data temporarily. Registers are used in a wide range of applications, including microprocessors, digital signal processors, and other digital circuits.
- **Digital counters:** The SR flip-flop can be used in digital counters to count up or down based on an input signal. For example, a timer circuit.
- **Data synchronization:** The SR flip-flop can be used to synchronize data signals between two digital circuits, ensuring that they are operating on the same clock cycle. This is useful in communication systems where data needs to be transmitted and received at specific times.
- **Oscillators:** The SR flip-flop can be used in conjunction with other components to create simple oscillators that generate a periodic signal. This is useful in applications such as clock circuits and audio signal generators.